14.2 Exercises - Specific heat capacity and specific latent heat

1.

a. A student states, quite wrongly, that temperature measures the amount of thermal energy (heat) in a body. State and explain two observations that show why this statement is incorrect.

.....

.....[4]

b. A thermometer and an electrical heater are inserted into holes in an aluminium block of mass 960 g, as shown in Fig.

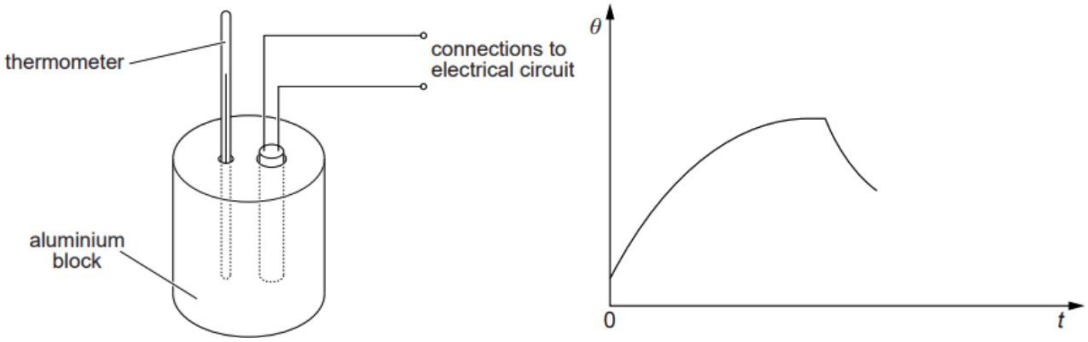

The power rating of the heater is 54 W.
The heater is switched on and readings of the temperature of the block are taken at regular time intervals. When the block reaches a constant temperature, the heater is switched off and then further temperature readings are taken. The variation with time t of the temperature θ of the block is shown in Fig.

i. Suggest why the rate of rise of temperature of the block decreases to zero.

.....

.....[2]

ii. After the heater has been switched off, the maximum rate of fall of temperature is 3.7 K per minute. Estimate the specific heat capacity of aluminium.

specific heat capacity = ... J kg^{-1} K^{-1} [3]

[Total: 9]

2.

a. Define specific latent heat.

.....

.....[2]

b. A beaker containing a liquid is placed on a balance, as shown in Fig.

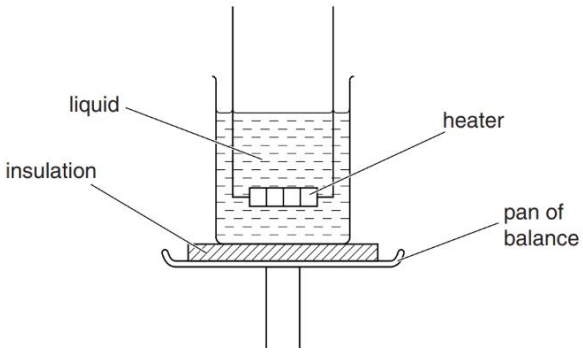

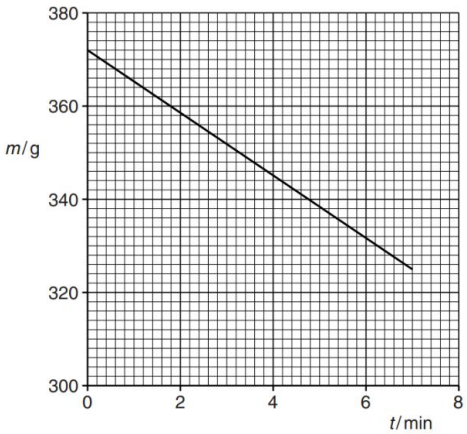

A heater of power 110 W is immersed in the liquid. The heater is switched on and, when the liquid is boiling, balance readings m are taken at corresponding times t.
A graph of the variation with time t of the balance reading m is shown in Fig.

i. State the feature of Fig. which suggests that the liquid is boiling at a steady rate.

.....

.....[1]

ii. Use data from Fig. to determine a value for the specific latent heat L of vaporisation of the liquid.

L = ... J kg^{-1} [3]

iii. State, with a reason, whether the value determined in (ii) is likely to be an overestimate or an underestimate of the normally accepted value for the specific latent heat of vaporisation of the liquid.

.....

.....

.....[2]

[Total: 8]

3.

a. An electrical heater is immersed in some melting ice that is contained in a funnel, as shown in Fig.

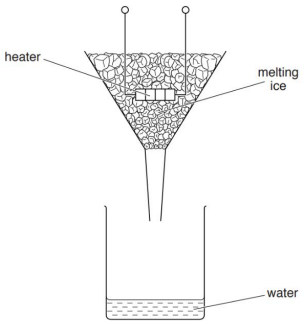

power of heater P/ W	mass m melted in 5.0 minutes/g	mass m melted per second/g s^{-1}
70	78	.....
110	114	.....

The heater is switched on and, when the ice is melting at a constant rate, the mass m of ice melted in 5.0 minutes is noted, together with the power P of the heater. The power P of the heater is then increased. A new reading for the mass m of ice melted in 5.0 minutes is recorded when the ice is melting at a constant rate. Data for the power P and the mass m are shown in Fig.

i. Complete Fig. to determine the mass melted per second for each power of the heater. [2]

ii. Use the data in the completed Fig. 3.2 to determine

1. a value for the specific latent heat of fusion L of ice,

L = ... J kg^{-1} [3]

2. the rate h of thermal energy gained by the ice from the surroundings.

h = ... W [2]

[Total: 7]

4.

a. State the reason why two objects that are at the same temperature are described as being in thermal equilibrium

.....[1]

b. Fig. shows the variations with temperature of the densities of mercury and of water between 0°C and 100°C.

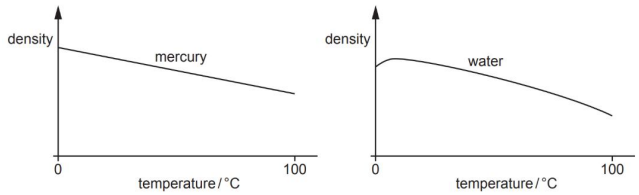

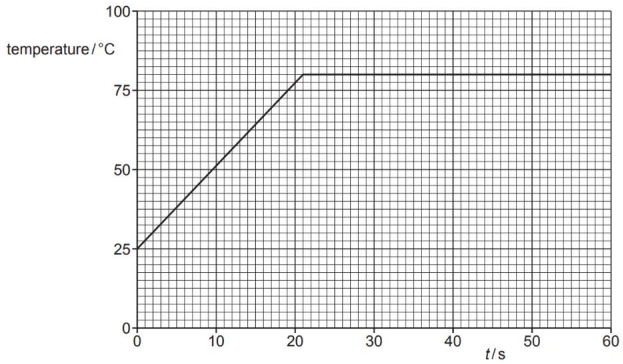

Temperature may be measured using the variation with temperature of the density of a liquid. Suggest why, for measuring temperature over this temperature range:

i. mercury is a suitable liquid

.....[1]

ii. water is not a suitable liquid.

.....

.....[2]

c. A beaker contains a liquid of mass 120g. The liquid is supplied with thermal energy at a rate of 810W. The beaker has a mass of 42g and a specific heat capacity of $0.84 Jg^{-1}K^{-1}$. The beaker and the liquid are in thermal equilibrium with each other at all times and are insulated from the surroundings. Fig. shows the variation with time t of the temperature of the liquid.

i. State the boiling temperature, in °C, of the liquid.

temperature = ... °C [1]

ii. Determine the specific heat capacity, in $Jg^{-1}K^{-1}$, of the liquid.

specific heat capacity = ... $J\ kg^{-1}\ K^{-1}$ [4]

The experiment in (c) is repeated using water instead of the liquid in (c). The mass of liquid used, the power supplied, and the initial temperature are all unchanged. The specific heat capacity of water is approximately twice that of the liquid in (c). The boiling temperature of water is 100°C. On Fig., sketch the variation with time t of the temperature of the water between t = 0 and t = 60s. Numerical calculations are not required. [2]

[Total: 7]